ESC
ENGINEERED SEALS & COMPONENTS, LLC.

ULTRA-PRECISION WEAR RINGS

SERIES 400 - PISTON
SERIES 401 - ROD
METRIC

KEY FEATURES OF METRIC WEAR RINGS:

- Many Metric cross sections available
  1,5 2,0 2,5 3,0 3,2 3,5 4, 0 4,5 5,0 6,0 mm
- Ultra Precision +0,025 / -0,025 C/S Tolerances
- High Compressive Strengths
- Diameters to 400 mm
- Width up to 105 mm
- Large material selection: Glass Filled Nylon, High Temp. Nylon, Acetal Carbon Filled HTN, Laminate Composites
- Piston Style & Rod Style
- Butt Cut - Scarf Cut- Step Cut

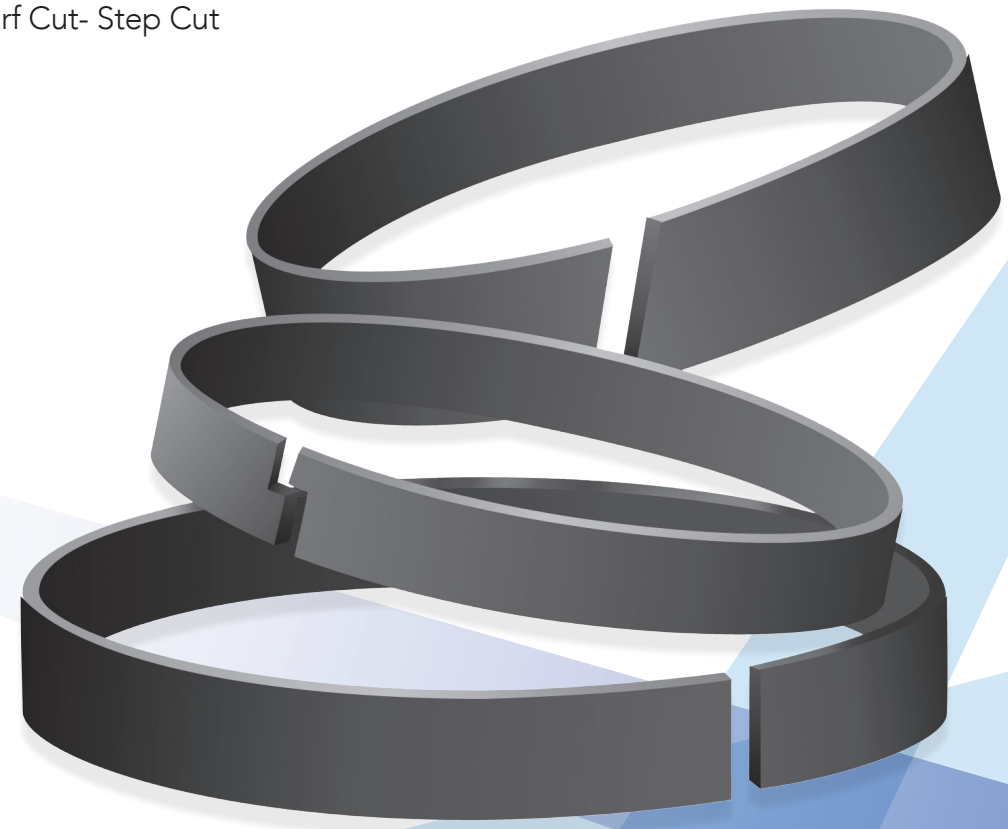

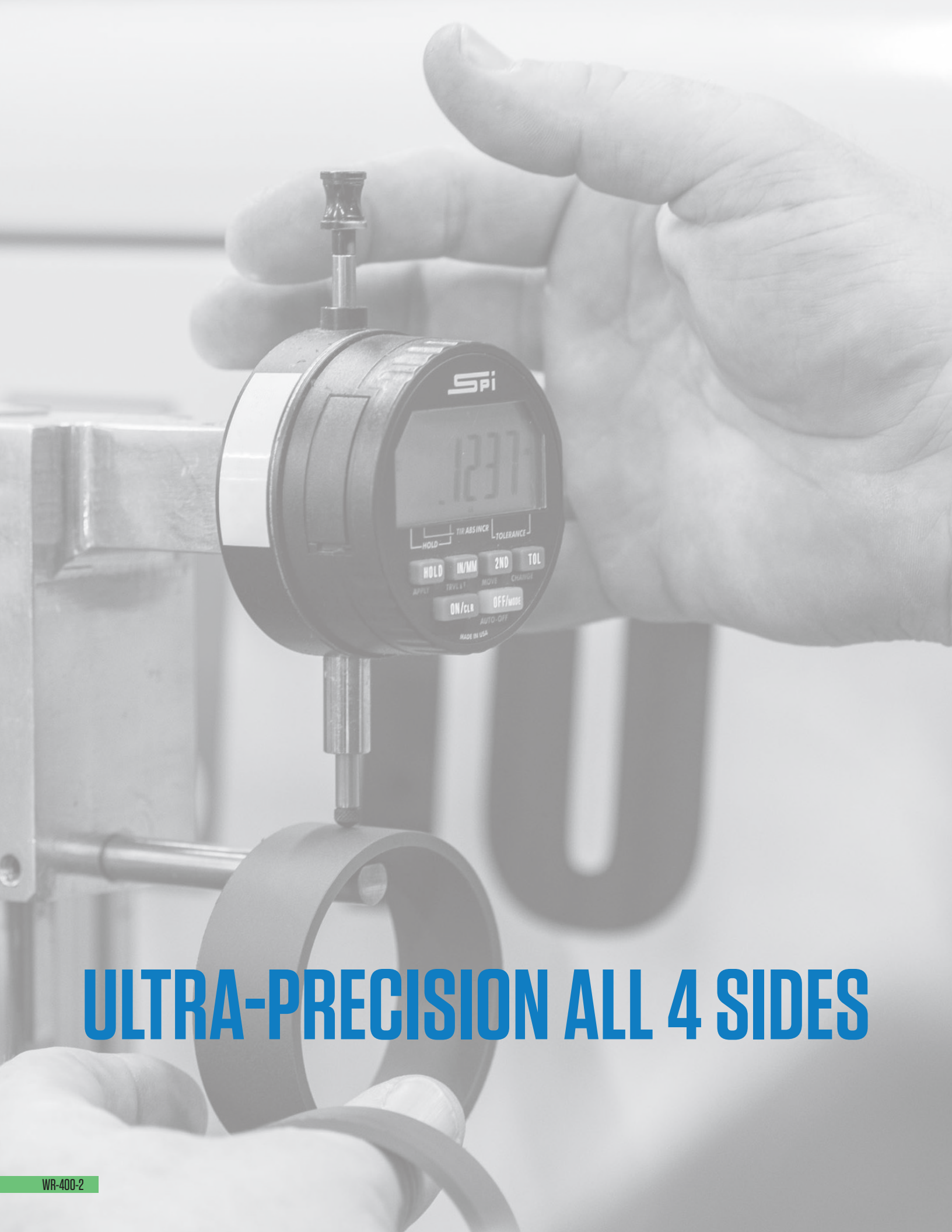

ULTRA-PRECISION ALL 4 SIDES

ESC-LON ULTRA PRECISION WEAR RING ADVANTAGES

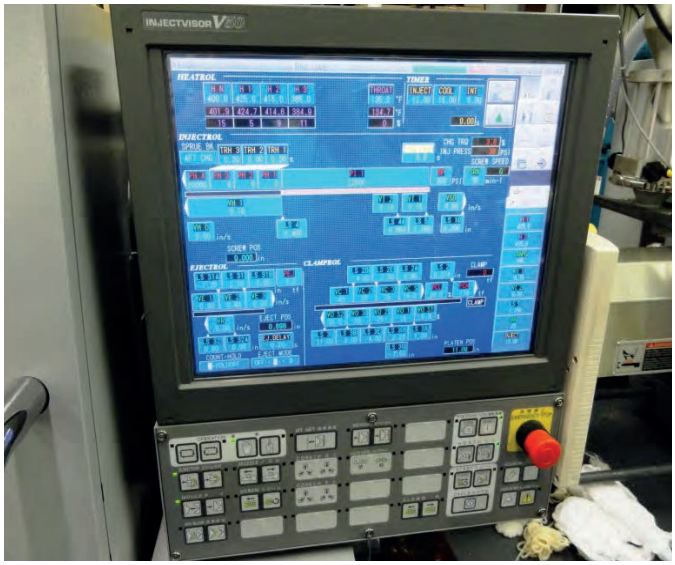

ESC uses the latest, state-of-the-art, injection equipment to injection mold a billet to very close tolerances from only the highest grade materials. Using internal lubricants and proprietary additives, ESC has formulated a version of glass filled nylon to be the best possible wear ring. We then machine each part to EXACTING tolerances. Our material and processes REALLY do make the *ESC*-LON Wear Rings are finished machined to a thickness tolerance of +/-.001 inches unless otherwise specified. The state-of the-art process and continuous improvement, generally keep the process Cpk's above 3.5. This provides better control of the extrusion gap and reduction of the apparatus or cylinder bending loads. *ESC* Ultra Precision Wear Rings are **THE** choice for demanding applications.

ESC-LON wear rings:

- Internally Lubricated. Port
- Passing Capable
- Non-Scoring.
- Highest Compressive Strength.
- Longest Wearing
- Low Moisture Absorption

AVAILABLE WEAR RING SHAPES AND SPLITS

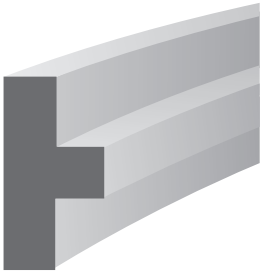

T-RING

ANGLE CUT

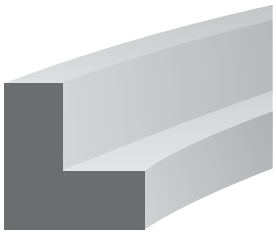

I.D. L-RING

BUTT CUT

O.D. L-RING

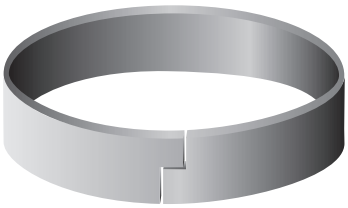

STEP CUT

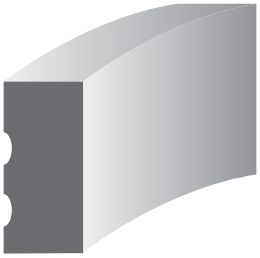

SPIRAL OR GROOVED

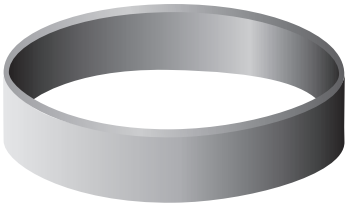

SOLID

3503 W. Milwaukee • Spencer, IA 51301 • p: 712-580-3990 • sales@engseals.com • www.engseals.com

ESC-LON ULTRA PRECISION WEAR RING GROOVE DESIGN GUIDE - METRIC

Piston Groove Calculations - METRIC (mm)

Formula for calculating Piston Wear Ring grooves using alternative extrusion gaps, metal-to-metal clearances and machining tolerances:

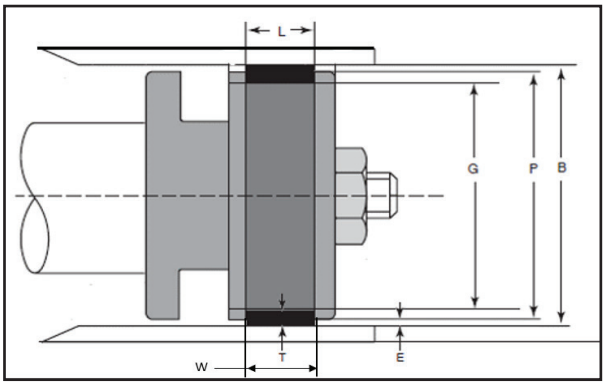

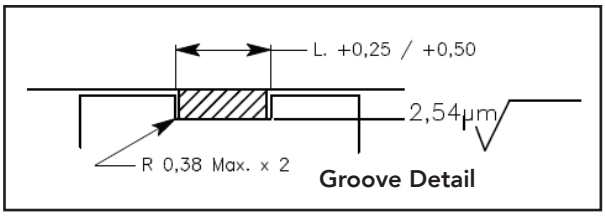

1. Maximum Groove Diameter, G_1:

$$G_1 = \text{Minimum Bore Diameter } B_1 \quad (-0{,}05) - 2x\,(\text{Max Wear Ring Cross Section, } T_1)$$

2. Minimum Groove Diameter, G:

$$\text{Minimum Groove Diameter } G = G_1 - (M \text{ machining tolerances})$$

3. Maximum Piston Diameter, P_1:

$$P_1 = \text{Minimum Groove Diameter } G + 2x \left[\text{Minimum Wear Ring Cross Section}\right] - 2x \left[\text{Desired minimum radial Metal-to-metal Clearance } CL\right]$$

4. Minimum Groove Width, L:

$$L = (\text{Nominal Width } W_1) + 0{,}25$$

5. Maximum Extrusion gap, E_1:

$$E_1 = B\ max - \left(G\ min. + T\ min. + \frac{(P\ min. - G\ min.)}{2}\right.$$

Notes:

* Subtract this amount (-0,025 or -0,05) from Minimum Bore to allow for Bore ovality and Installation.

1. Tolerance for ***L*** is +0,25 / +0,50.
2. Groove radii must not exceed 0,38 max.
3. ESC recommends a minimum of 0,13 metal-to-metal clearance. Using the above calculations may result in metal to metal contact if the wear ring material's compressive strength properties are not considered. *See **Table 1** and **Table 2** for further details.* Contact ESC if additional assistant is required.

*** Extrusion Gap *DOES NOT* take into consideration tube swell under pressure.**

Example for above Formulas:

Given: Bore 74,95/75,00 (***B***) Wear Ring thickness 2,95/3,00 and 15,00 (***L***) wide. Piston machining tolerance is -0,05. Minimum desired radial metal-to-metal clearance is 0,13 per side.

1. 74,95 - 0,05 -6,0 = 68,90 (G1 Maximum Groove Diameter)
2. 68,90 - 0.05 = 68,85 (G Minimum Groove Diameter)
3. 68,85 +(2x 2,95) - (2x 0.13) = 74,49 Maximum Piston Diameter, P_1
4. 15,00 + 0,25 = 15,25 Minimum Groove Width, ***L min.***
5. 75,00 - (68,85 + 2,95) + ((74.,44-68,85)/2)) = 0,40 Extrusion Gap Maximum ***E*** max.

B.= Bore Dia. 75,00 / 74,95
P.= Piston Dia. 74,49 / 74,44
G. = Groove Dia. 68,90 / 68,85
L. = Groove Width 15,50 / 15,25
E. = TOTAL Extrusion Gap 0,40

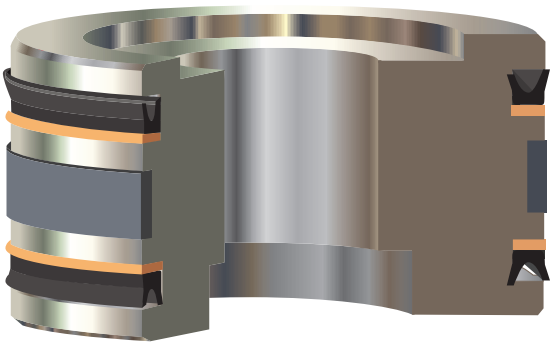

ESC-LON ULTRA PRECISION WEAR RING GROOVE DESIGN GUIDE - METRIC

Rod Groove Calculations- METRIC (mm)

Formula for calculating Rod Wear Ring grooves using alternative extrusion gaps, metal-to-metal clearances and machining tolerances:

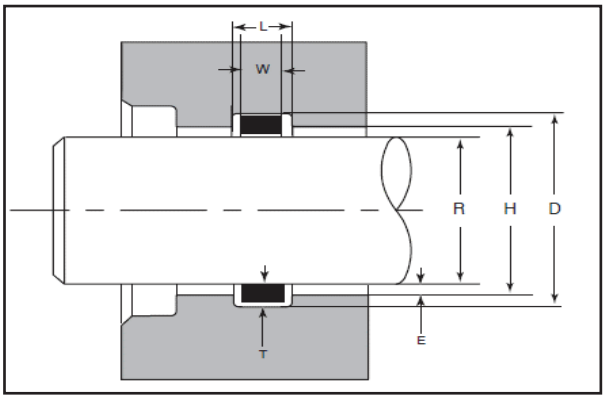

1. Minimum Groove Diameter, ***D***:

$$D = \text{Maximum ROD Diameter } R \quad (+0{,}05) + 2x\,(\text{Max Wear Ring Cross Section, } T_1)$$

2. Maximum Groove Diameter, D_1:

$$\text{Maximum Groove Diameter } D_1 = D + (M \text{ machining tolerances})$$

3. Minimum Throat Diameter, ***H***:

$$H = \text{Maximum Groove Diameter } D_1 - 2x\left[\text{Minimum Wear Ring Cross Section}\right] + 2x\left[\text{Desired minimum radial Metal-to-metal Clearance } CL\right]$$

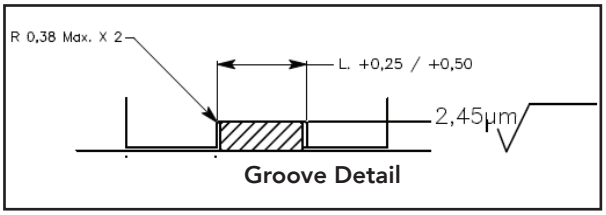

4. Minimum Groove Width, ***L***:

$$L = (\text{Nominal Width } W_1) + 0{,}25$$

5. Maximum Extrusion gap, (total) E_1:

$$E_1 = H_1 \text{ max} + \frac{(D_1 \text{ max.} - H_1 \text{ max.})}{2} - (T \text{ min.} - R_1 \text{ min.})$$

Notes:

* Add (0,025 to 0,05) to Maximum Rod to compensate for ovality and assembly.

1. Tolerance for ***L*** is +0,25 / +0,50.
2. Groove radii must not exceed 0,38 max.
3. ESC recommends a minimum of 0,13 metal-to-metal clearance. Using the above calculations may result in metal to metal contact if the wear ring material's compressive strength properties are not considered. *See **Table 1** and **Table 2** for further details.* Contact ESC if additional assistant is required.

Example for above Formulas:

Given: Bore 49,95/50,00 (***B***) Wear Ring thickness 2,95/3,00 and 25,00 (***L***) wide. Rod machining tolerance is 0,05. Minimum desired radial metal-to-metal clearance is 0,13.

1. 50,00 + 0,05 +6,0 = 56,05 (***D*** Minimum Groove Diameter)
2. 56,05 + 0,05 = 56,10 (D_1 Maximum Groove Diameter)
3. 56,10 - (2x 2,95) + (2x 0,13 = 50,46 Minimum Throat Diameters, ***H***
4. 25,00 + 0,25 = 25,25 Minimum Groove Width, ***L* min.**
5. 50,51 + (56,10 - 50,51 / 2) - (2,95 + 49.95) = 0.014

Extrusion Gap Maximum *E* max

R= Rod Dia. = 49,95 / 50,00
H = Throat Dia. = 50,51 / 50,46
L. = Groove Width = 25,25 / 25,50
E. = TOTAL Extrusion Gap = 0,40

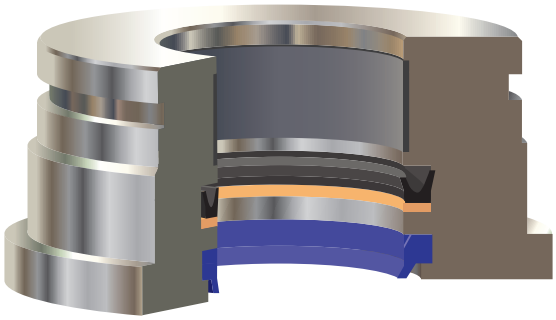

3503 W. Milwaukee • Spencer, IA 51301 • p: 712-580-3990 • sales@engseals.com • www.engseals.com

ULTRA-PRECISION WEAR RING CROSS SECTIONS AND C/S INSTALLATION GUIDE LINES - METRIC

RADIAL CROSS SECTIONS

Nominal mm	Actual mm
1,50	1,50 / 1,45
2,00	2,00 / 1,95
2,50	2,50 / 2,45
3,00	3,00 / 2, 95
3,50	3,50 / 3,45
4,00	4,00 / 3,95
5,00	5,00 / 4,95
6,00	6,00 / 5,95

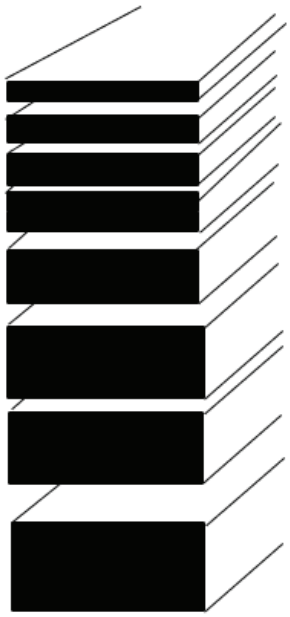

BUTT CUT

ANGLE CUT

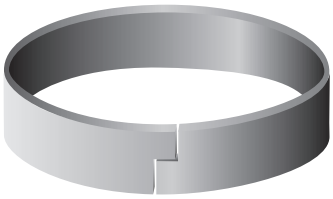

STEP CUT

RECOMMENDED C/S VS. DIAMETER INSTALLATION GUIDE LINES

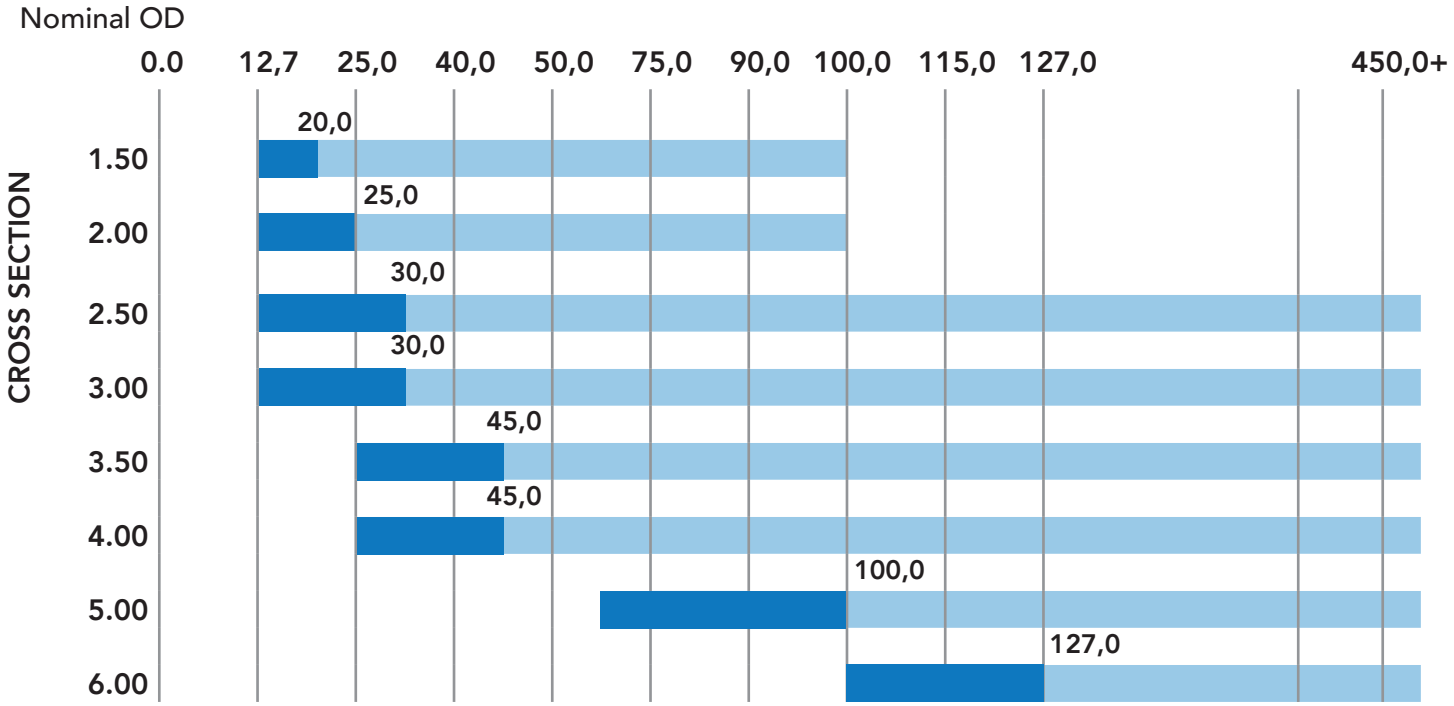

Light sections indicate Rod Guide Installations. Example: 1,5mm cross section wear ring is recommended for 20,0mm to 100,0mm Diameter. Anything under 20,0mm Dia. would be more difficult to install. Light and Dark sections indicate Piston Installations. Example: 3,0mm cross section wear ring is recommended for 12,7mm to 450,0+mm. Anything under 25,00mm Dia. would be more difficult to install.

AVAILABLE WEAR RING WIDTHS BY DIAMETER METRIC SIZES

STANDARD METRIC WIDTHS BY DIAMETER

2,5mm thru 6,0mm CROSS SECTION

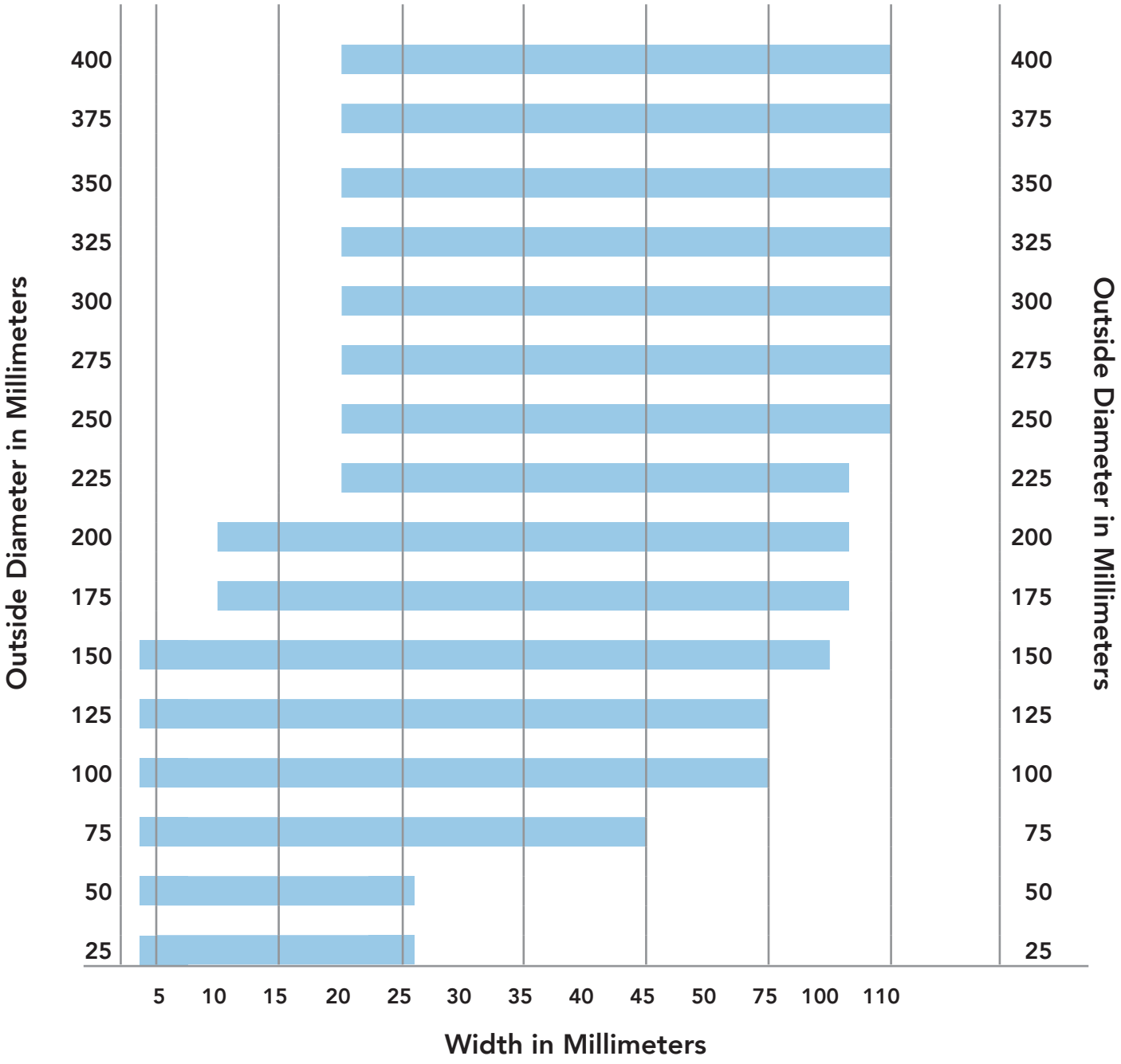

The graph above shows the current capability of *ESC* size range,
Consult factory for availability for specific size, cross section and widths.

3503 W. Milwaukee • Spencer, IA 51301 • p: 712-580-3990 • sales@engseals.com • www.engseals.com

RECOMMENDED TEMPERATURE RANGE FOR *ESC* ULTRA PRECISION WEAR RINGS

RECOMMENDED OPERATING TEMPERATURE FOR *ESC* STANDARD WEAR RING COMPOUNDS

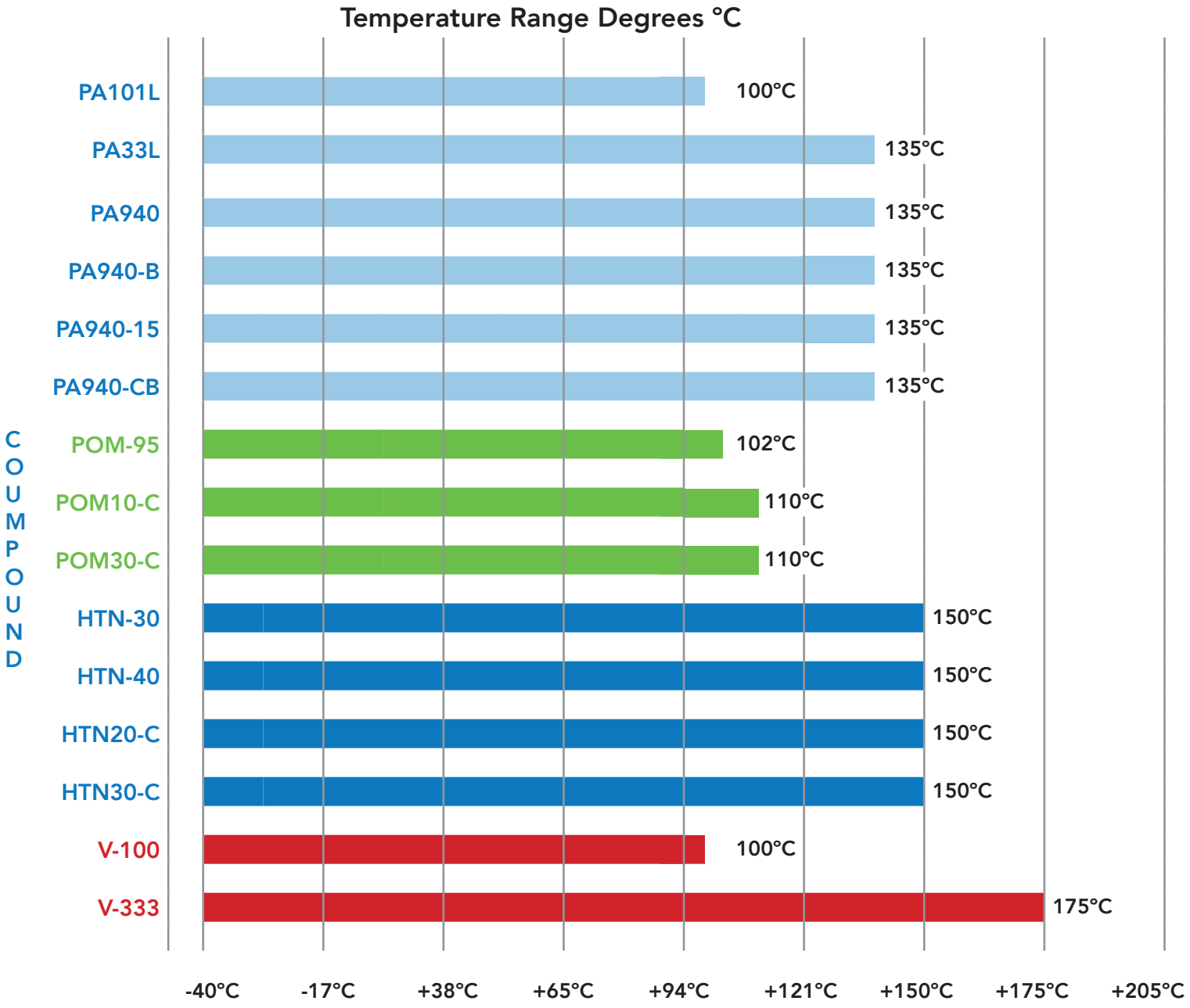

When using this chart, keep in mind, as a plastic gets hotter it will loose much of it's tensile and compressive strength. Typically at +65°C most Nylons will loose about 40-50% of the Tensile and Compressive strength. Refer to the ESC Wear Ring Engineering Guide for more information.

RECOMMENDED OPERATING SPEED RANGE FOR *ESC* ULTRA PRECISION WEAR RINGS

DYNAMIC *SPEED* RANGE: METERS / SECOND

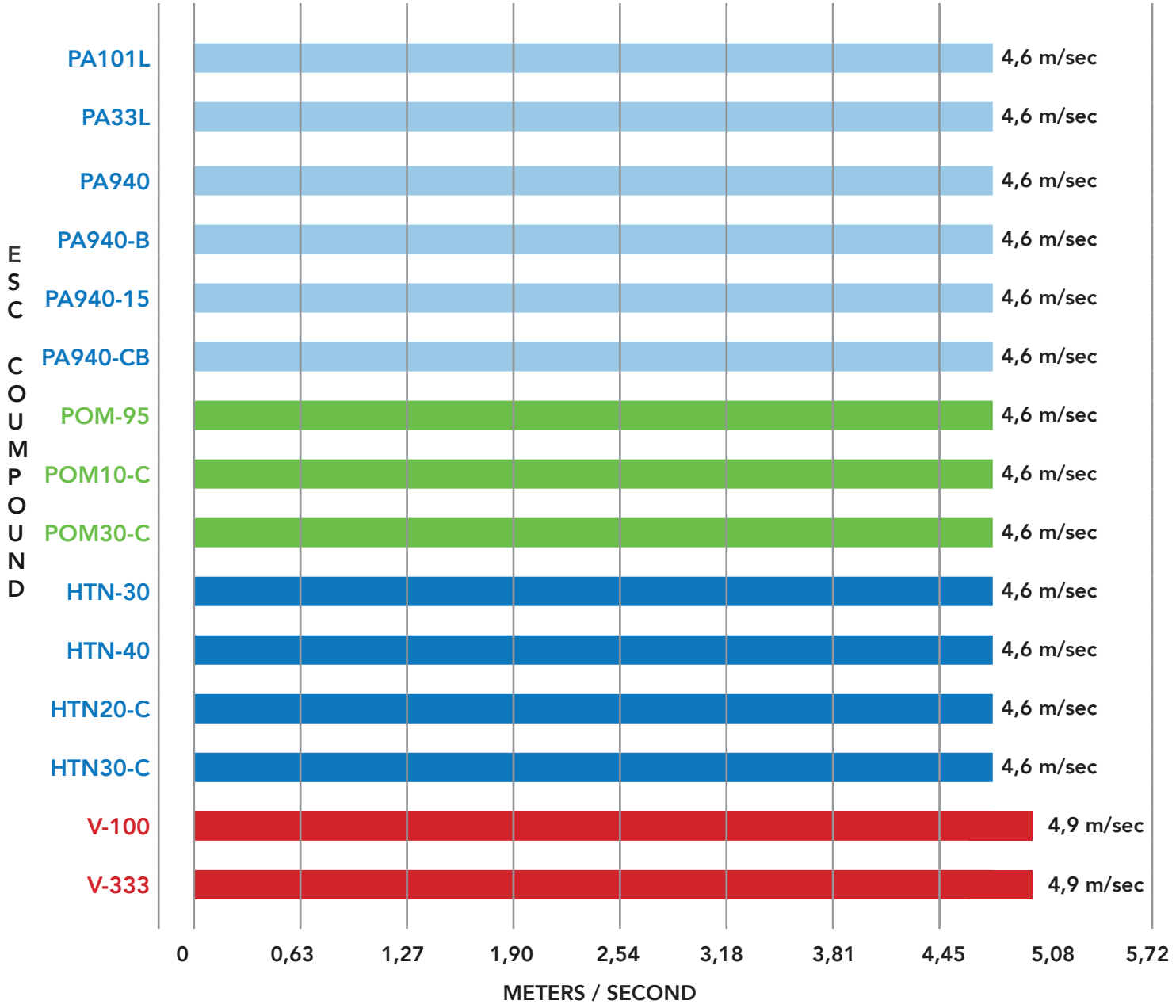

When picking a compound to use based on the speed the system will be operating at, make sure you look at Table 1 and Table 2 in the *ESC* Engineering Guide to see the strength of material you may need.

As system speed increases, so does friction. As friction increases the strength of the compound will decline. *ESC* has several compounds that have friction reducing modifiers added. In most plastics when you add a friction modifiers, you reduce the strength of the compound.

Please use the formulas in the *ESC* Wear Ring Engineering Guide to determine if you have enough strength for you application. By using a lower coefficient of friction material, one must be careful to take all factors into consideration.

Please consider STAMPS when designing.
S - Speed
T - Temperature
A - Application
M - Media
P - Pressure
S - Size

3503 W. Milwaukee • Spencer, IA 51301 • p: 712-580-3990 • sales@engseals.com • www.engseals.com

ESC
ENGINEERED SEALS & COMPONENTS, LLC.

METRIC

WEAR RINGS

SERIES 400 - PISTON
SERIES 401 - ROD
SIZE RANGE

ENGINEERED SEALS & COMPONENTS, LLC.

SERIES 400 METRIC WEAR RINGS 1,5MM CROSS SECTION

PART NUMBER -BC for butt cut -SC for scarf cut	COMPOUND	BORE O.D.	I.D.	WIDTH	C/S
400-028-010-1.5	PA940-B	28	25	10.0	1.45 / 1.50
400-032-04-1.5	PA940-B	32	29	4.0	1.45 / 1.50
400-035-04-1.5	PA940-B	35	32	4.0	1.45 / 1.50
400-035-09.5-1.5	PA940-B	35	32	9.5	1.45 / 1.50
400-035-15-1.5	PA940-B	35	32	15.0	1.45 / 1.50
400-035-15.9-1.5	PA940-B	35	32	15.9	1.45 / 1.50
400-039-16.1.5	PA940-B	39	36	16.0	1.45 / 1.50
400-043-15.9-1.5	PA940-B	43	40	15.9	1.45 / 1.50
400-048-22.5-1.5	PA940-B	48	45	22.5	1.45 / 1.50
400-048-25-1.5	PA940-B	48	45	25.0	1.45 / 1.50

PART NUMBER -BC for butt cut -SC for scarf cut	COMPOUND	BORE O.D.	I.D.	WIDTH	C/S
400-053-25.4-1.5	PA940-B	53	50	24.5	1.45 / 1.50
400-063-25-1.5	PA940-B	63	60	25.0	1.45 / 1.50
400-068-25-1.5	PA940-B	68	65	25.0	1.45 / 1.50
400-075-25-1.5	PA940-B	78	75	25.0	1.45 / 1.50
400-083-25-1.5	PA940-B	83	80	25.0	1.45 / 1.50
400-088-25-1.5	PA940-B	88	85	25.0	1.45 / 1.50
400-093-24.9-1.5	PA940-B	93	90	24.9	1.45 / 1.50
400-038-24.4-1.53	PA940-B	38	34.94	24.4	1.45 / 1.50
400-058-24.7-1.53	PA940-B	58	54.94	24.7	1.45 / 1.50

SERIES 400 METRIC WEAR RINGS 2MM CROSS SECTION

PART NUMBER -BC for butt cut -SC for scarf cut	COMPOUND	BORE O.D.	I.D.	WIDTH	C/S
400-035-08-2.0	PA940-B	35	31	8.0	1.95 / 2.0
400-040-12-2.0	PA940-B	40	36	12.0	1.95 / 2.0
400-045-20-2.0	PA940-B	45	41	20.0	1.95 / 2.0
400-050-9.5-2	PA940-B	50	46	9.5	1.95 / 2.0
400-050-010-2.0	PA940-B	50	46	10.0	1.95 / 2.0
400-050-14.5-2.0	PA940-B	50	46	14.5	1.95 / 2.0
400-062-10-2.0	PA940-B	62	58	10.0	1.95 / 2.0
400-063-12-2.0	PA940-B	63	59	12.0	1.95 / 2.0
400-064-35-2.0	PA940-B	64	60	35.0	1.95 / 2.0
400-065-10-2.0	PA940-B	65	61	10.0	1.95 / 2.0

PART NUMBER -BC for butt cut -SC for scarf cut	COMPOUND	BORE O.D.	I.D.	WIDTH	C/S
400-070-10-2.0	PA940-B	70	66	10.0	1.95 / 2.0
400-075-10-2.0	PA940-B	75	71	10.0	1.95 / 2.0
400-075-15.2.0	PA940-B	75	71	15.0	1.95 / 2.0
400-080-10-2.0	PA940-B	80	76	10.0	1.95 / 2.0
400-085-1-2.0	PA940-B	85	81	10.0	1.95 / 2.0

3503 W. Milwaukee • Spencer, IA 51301 • p: 712-580-3990 • sales@engseals.com • www.engseals.com

ENGINEERED SEALS & COMPONENTS, LLC.

SERIES 400 METRIC WEAR RINGS 2,5MM CROSS SECTION

PART NUMBER -BC for butt cut -SC for scarf cut	COMPOUND	BORE O.D.	I.D.	WIDTH	C/S
400-070-09.5-2.4	PA940-B	70	65.2	9.5	2.35 / 2.40
400-085-05.35-2.4	PA940-B	85	80.2	5.4	2.35 / 2.40
400-085-15-2.45	PA940-B	85	80.1	15.0	2.40 / 2.45
400-025-5-2.5	PA940-B	25	20.0	5.0	2.45 / 2.50
400-028-8.4-2.5	PA940-B	28	23.0	8.4	2.45 / 2.50
400-033-05-2.5	PA940-B	33	28.0	5.0	2.45 / 2.50
400-035-05-2.5	PA940-B	35	30.0	5.0	2.45 / 2.50
400-036-11.2-2.5	PA940-B	36	31	11.2	2.45 / 2.50
400-037-14.7-2.4	PA940-B	37	32	14.7	2.35 / 2.40
400-040-05-2.5	PA940-B	40	35	5.0	2.45 / 2.50
400-040-09-2.5	PA940-B	40	35	9.0	2.45 / 2.50
400-040-10-2.5	PA940-B	40	35	10.0	2.45 / 2.50
400-040-6.06-2.5	PA940-B	40	35	6.1	2.45 / 2.50
400-045-05-2.5	PA940-B	45	40	5.0	2.45 / 2.50
400-045-9.5-2.5	PA940-B	45	40	9.5	2.45 / 2.50
400-047-9.3-2.5	PA940-B	47	52	9.3	2.45 / 2.50
400-048-5.6-2.5	PA940-B	48	43	5.6	2.45 / 2.50
400-050-05-2.5	PA940-B	50	45	5.0	2.45 / 2.50
400-050-05.6-2.5	PA940-B	50	45	5.6	2.45 / 2.50
400-050-6.8-2.5	PA940-B	50	45	6.8	2.45 / 2.50
400-050-9.34-2.5	PA940-B	50	45	9.3	2.45 / 2.50
400-050-09.5-2.5	PA940-B	50	45	9.5	2.45 / 2.50
400-050-14.8-2.5	PA940-B	50	45	14.8	2.45 / 2.50
400-050-15-2.5	PA940-B	50	45	15.0	2.45 / 2.50
400-050-020-2.5	PA940-B	50	45	20.0	2.45 / 2.50
400-055-06.2-2.5	PA940-B	55	50	6.2	2.45 / 2.50
400-055-07.9-2.5	PA940-B	55	50	7.9	2.45 / 2.50
400-055-09.2-2.5	PA940-B	55	50	9.2	2.45 / 2.50
400-055-20-2.5	PA940-B	55	50	20.0	2.45 / 2.50
400-055-25-2.5	PA940-B	55	50	25.0	2.45 / 2.50
400-060-05-2.5	PA940-B	60	55	5.0	2.45 / 2.50
400-060-06-2.5	PA940-B	60	55	6.0	2.45 / 2.50
400-060-14.5-2.5	PA940-B	60	55	14.5	2.45 / 2.50
400-060-15-2.5	PA940-B	60	55	15.0	2.45 / 2.50

PART NUMBER -BC for butt cut -SC for scarf cut	COMPOUND	BORE O.D.	I.D.	WIDTH	C/S
400-060-20-2.5	PA940-B	60	55	20.0	2.45 / 2.50
400-063-05.6-2.5	PA940-B	63	58	5.6	2.45 / 2.50
400-063-4.8-2.5	PA940-B	63	58	4.8	2.45 / 2.50
400-063-09-2.5	PA940-B	63	58	9.0	2.45 / 2.50
400-063-20-2.5	PA940-B	63	58	20.0	2.45 / 2.50
400-062-16-2.5	PA940-B	65	60	6.0	2.45 / 2.50
400-062-10-2.5	PA940-B	65	60	10.0	2.45 / 2.50
400-065-05-2.5	PA940-B	65	60	5.0	2.45 / 2.50
400-065-06-2.5	PA940-B	65	60	6.0	2.45 / 2.50
400-065-09-2.5	PA940-B	65	60	9.0	2.45 / 2.50
400-065-10-2.5	PA940-B	65	60	10.0	2.45 / 2.50
400-065-15-2.5	PA940-B	65	60	15.0	2.45 / 2.50
400-065-25-2.5	PA940-B	65	60	25.0	2.45 / 2.50
400-068-05-2.5	PA940-B	68	63	5.0	2.45 / 2.50
400-068-19.8-2.5	PA940-B	68	63	19.8	2.45 / 2.50
400-070-5.5-2.5	PA940-B	70	65	5.5	2.45 / 2.50
400-070-06.9-2.5	PA940-B	70	65	6.9	2.45 / 2.50
400-070-09-2.5	PA940-B	70	65	9.0	2.45 / 2.50
400-070-9.31-2.5	PA940-B	70	65	9.3	2.45 / 2.50
400-070-9.52-2.5	PA940-B	70	65	9.5	2.45 / 2.50
400-070-10-2.5	PA940-B	70	65	10.0	2.45 / 2.50
400-070-14-2.5	PA940-B	70	65	14.0	2.45 / 2.50
400-070-15.2.5	PA940-B	70	65	15.0	2.45 / 2.50
400-070-20-2.5	PA940-B	70	65	20.0	2.45 / 2.50
400-071-9.7-2.58	PA940-B	71	66	9.7	2.45 / 2.50
400-075-05.4-2.5	PA940-B	75	70	5.4	2.45 / 2.50
400-075-06.2-2.5	PA940-B	75	70	6.2	2.45 / 2.50
400-075-09-2.5	PA940-B	75	70	9.0	2.45 / 2.50
400-075-10-2.5	PA940-B	75	70	10.0	2.45 / 2.50
400-075-14-2.5	PA940-B	75	70	15.0	2.45 / 2.50
400-075-15-2.5	PA940-B	75	70	15.0	2.45 / 2.50
400-075-6.22-2.5	PA940-B	75	70	6.22	2.45 / 2.50
400-060-14.5-2.5	PA940-B	60	55	14.5	2.45 / 2.50
400-060-15-2.5	PA940-B	60	55	15.0	2.45 / 2.50

ENGINEERED SEALS & COMPONENTS. LLC.

SERIES 400 METRIC WEAR RINGS 2,5MM CROSS SECTION

PART NUMBER -BC for butt cut -SC for scarf cut	COMPOUND	BORE O.D.	I.D.	WIDTH	C/S
400-080-4.8-2.5	PA940-B	80	75	4.8	2.45 / 2.50
400-080-05-2.5	PA940-B	80	75	5.0	2.45 / 2.50
400-080-09-2.5	PA940-B	80	75	9.0	2.45 / 2.50
400-080-9.5-2.5	PA940-B	80	75	9.5	2.45 / 2.50
400-080-10-2.5	PA940-B	80	75	10.0	2.45 / 2.50
400-080-12-2.5	PA940-B	80	75	12.0	2.45 / 2.50
400-080-13.2.5	PA940-B	80	75	13.0	2.45 / 2.50
400-080-20-2.5	PA940-B	80	75	20.0	2.45 / 2.50
400-085-06-2.5	PA940-B	85	80	6.0	2.45 / 2.50
400-085-05-2.5	PA940-B	85	80	5.0	2.45 / 2.50
400-085-7.9-2.5	PA940-B	85	80	7.9	2.45 / 2.50
400-085-09-2.5	PA940-B	85	80	9.0	2.45 / 2.50
400-085-9.5-2.5	PA940-B	85	80	9.5	2.45 / 2.50
400-085-9.7-2.5	PA940-B	85	80	9.7	2.45 / 2.50
400-085-15-2.5	PA940-B	85	80	15.0	2.45 / 2.50
400-085-25-2.5	PA940-B	85	80	25.0	2.45 / 2.50
400-090-5.3-2.5	PA940-B	90	85	5.3	2.45 / 2.50
400-090-06-2.5	PA940-B	90	85	6.0	2.45 / 2.50
400-090-09-2.5	PA940-B	90	85	9.0	2.45 / 2.50
400-090-9.3-2.5	PA940-B	90	85	9.3	2.45 / 2.50
400-090-9.7-2.5	PA940-B	90	85	9.7	2.45 / 2.50
400-095-05-2.5	PA940-B	95	90	5.0	2.45 / 2.50
400-095-6.1-2.5	PA940-B	95	90	6.1	2.45 / 2.50
400-095-09-2.5	PA940-B	95	90	9.0	2.45 / 2.50
400-095-9.7-2.5	PA940-B	95	90	9.7	2.45 / 2.50
400-095-15-2.5	PA940-B	95	90	15.0	2.45 / 2.50
400-095-20-2.5	PA940-B	95	90	20.0	2.45 / 2.50
400-100-5.3-2.5	PA940-B	100	95	5.3	2.45 / 2.50
400-100-09-2.5	PA940-B	100	95	9.0	2.45 / 2.50
400-100-9.5-2.5	PA940-B	100	95	9.5	2.45 / 2.50
400-100-14.8-2.5	PA940-B	100	95	14.8	2.45 / 2.50
400-105-06.1-2.5	PA940-B	105	100	6.1	2.45 / 2.50
400-105-09-2.5	PA940-B	105	100	9.0	2.45 / 2.50
400-105-12.5-2.5	PA940-B	105	100	12.5	2.45 / 2.50

PART NUMBER -BC for butt cut -SC for scarf cut	COMPOUND	BORE O.D.	I.D.	WIDTH	C/S
400-109-7.8-2.5	PA940-B	108	103	7.8	2.45 / 2.50
400-110-05-2.5	PA940-B	110	105	5.0	2.45 / 2.50
400-110-07.6-2.5	PA940-B	110	105	7.6	2.45 / 2.50
400-110-07.9-2.5	PA940-B	110	105	7.9	2.45 / 2.50
400-110-14.8-2.5	PA940-B	110	105	14.8	2.45 / 2.50
400-110-15-2.5	PA940-B	110	105	15.0	2.45 / 2.50
400-115-09-2.5	PA940-B	115	110	9.0	2.45 / 2.50
400-115-09.5-2.5	PA940-B	115	110	9.5	2.45 / 2.50
400-115-12.5-2.5	PA940-B	115	110	12.5	2.45 / 2.50
400-115-14-2.5	PA940-B	115	110	14.0	2.45 / 2.50
400-115-40-2.5	PA940-B	115	110	40.0	2.45 / 2.50
400-120-05-2.5	PA940-B	120	115	5.0	2.45 / 2.50
400-120-7.9-2.5	PA940-B	120	115	7.9	2.45 / 2.50
400-120-09-2.5	PA940-B	120	115	9.0	2.45 / 2.50
400-120-9.5-2.5	PA940-B	120	115	9.5	2.45 / 2.50
400-120-12.5-2.5	PA940-B	120	115	12.5	2.45 / 2.50
400-120-14-2.5	PA940-B	120	115	14.0	2.45 / 2.50
400-120-14.8-2.5	PA940-B	120	115	14.8	2.45 / 2.50
400-120-25-2.5	PA940-B	120	115	25.0	2.45 / 2.50
400-125-05-2.5	PA940-B	125	120	5.0	2.45 / 2.50
400-125-07.9-2.5	PA940-B	125	120	7.9	2.45 / 2.50
400-125-09-2.5	PA940-B	125	120	9.0	2.45 / 2.50
400-125-9.4-2.5	PA940-B	125	120	9.4	2.45 / 2.50
400-125-9.7-2.5	PA940-B	125	120	9.7	2.45 / 2.50
400-125-14-2.5	PA940-B	125	120	14.0	2.45 / 2.50
400-130-05-2.5	PA940-B	130	125	5.0	2.45 / 2.50
400-130-07.9-2.5	PA940-B	130	125	7.9	2.45 / 2.50
400-130-09-2.5	PA940-B	130	125	9.0	2.45 / 2.50
400-130-14-2.5	PA940-B	130	125	14.0	2.45 / 2.50
400-130-14.8-2.5	PA940-B	130	125	14.8	2.45 / 2.50
400-130-39.7-2.5	PA940-B	130	125	39.7	2.45 / 2.50
400-135-07.9-2.5	PA940-B	135	130	7.9	2.45 / 2.50
400-135-14.2.5	PA940-B	135	130	14.0	2.45 / 2.50
400-105-12.5-2.5	PA940-B	105	100	12.5	2.45 / 2.50

3503 W. Milwaukee • Spencer, IA 51301 • p: 712-580-3990 • sales@engseals.com • www.engseals.com

ENGINEERED SEALS & COMPONENTS, LLC.

SERIES 400 METRIC WEAR RINGS 2,5MM CROSS SECTION

PART NUMBER -BC for butt cut -SC for scarf cut	COMPOUND	BORE O.D.	I.D.	WIDTH	C/S
400-140-07.9-2.5	PA940-B	140	135	7.9	2.45 / 2.50
400-140-09.5-2.5	PA940-B	140	135	9.5	2.45 / 2.50
400-140-12.5-2.5	PA940-B	140	135	12.5	2.45 / 2.50
400-140-14-2.5	PA940-B	140	135	14.0	2.45 / 2.50
400-145-9.5-2.5	PA940-B	145	140	9.5	2.45 / 2.50
400-145-14-2.50	PA940-B	145	140	14.0	2.45 / 2.50
400-145-15-2.5	PA940-B	145	140	15.0	2.45 / 2.50
400-145-25-2.5	PA940-B	145	140	25.0	2.45 / 2.50
400-150-09-2.5	PA940-B	150	145	9.0	2.45 / 2.50
400-150-12.2-2.5	PA940-B	150	145	12.2	2.45 / 2.50
400-150-12.5-2.5	PA940-B	150	145	12.5	2.45 / 2.50
400-150-14-2.5	PA940-B	150	145	14.0	2.45 / 2.50
400-150-14.8-2.5	PA940-B	150	145	14.8	2.45 / 2.50

PART NUMBER -BC for butt cut -SC for scarf cut	COMPOUND	BORE O.D.	I.D.	WIDTH	C/S
400-160-09-2.5	PA940-B	160	155	9.0	2.45 / 2.50
400-160-14-2.5	PA940-B	160	155	14.0	2.45 / 2.50
400-165-09-2.5	PA940-B	165	160	9.0	2.45 / 2.50
400-165-14-2.5	PA940-B	165	160	14.0	2.45 / 2.50
400-170-14-2.5	PA940-B	170	165	14.0	2.45 / 2.50
400-180-09-2.5	PA940-B	180	175	9.0	2.45 / 2.50
400-180-14-2.5	PA940-B	180	175	14.0	2.45 / 2.50
400-185-09-2.5	PA940-B	185	180	9.0	2.45 / 2.50
400-190-09-2.5	PA940-B	190	185	9.0	2.45 / 2.50
400-200-14-2.5	PA940-B	200	195	14.0	2.45 / 2.50
400-250-14-2.5	PA940-B	250	245	14.0	2.45 / 2.50
400-280-25-2.5	PA940-B	280	275	25.0	2.45 / 2.50
400-320-24-2.5	PA940-B	320	24	2.5	2.45 / 2.50
400-120-08-2.6	PA940-B	120	114.8	8.0	2.55 / 2.60

SERIES 400 METRIC WEAR RINGS 3,0MM CROSS SECTION

PART NUMBER -BC for butt cut -SC for scarf cut	COMPOUND	BORE O.D.	I.D.	WIDTH	C/S
400-045-14.5-3	PA940-B	45	39	14.5	2.95 / 3.00
400-050-05-3	PA940-B	50	44	5.0	2.95 / 3.00
400-051-9.6-3	PA940-B	51	45	9.6	2.95 / 3.00
400-051-22.2-3	PA940-B	51	45	22.2	2.95 / 3.00
400-055-10.5-3	PA940-B	55	49	10.5	2.95 / 3.00
400-055-15.5-3	PA940-B	55	49	15.5	2.95 / 3.00
400-056-12.7-3	PA940-B	56	50	12.7	2.95 / 3.00
400-056-25-3	PA940-B	56	50	25.0	2.95 / 3.00
400-065-15.5-3	PA940-B	65	59	15.5	2.95 / 3.00
400-069-30-3	PA940-B	69	63	30.0	2.95 / 3.00
400-069-31-3	PA940-B	69	63	31.0	2.95 / 3.00
400-070-14.5-3	PA940-B	70	64	14.5	2.95 / 3.00
400-070-15.5-3	PA940-B	70	64	15.5	2.95 / 3.00
400-070-19.5-3	PA940-B	70	64	19.5	2.95 / 3.00
400-075-12.7-3	PA940-B	75	69	12.7	2.95 / 3.00

PART NUMBER -BC for butt cut -SC for scarf cut	COMPOUND	BORE O.D.	I.D.	WIDTH	C/S
400-080-15.5-3	PA940-B	80	74	15.5	2.95 / 3.00
400-080-19.5-3	PA940-B	80	74	19.5	2.95 / 3.00
400-080-25-3	PA940-B	80	74	25.0	2.95 / 3.00
400-085-14.5-3	PA940-B	85	79	14.5	2.95 / 3.00
400-086-25-3	PA940-B	86	80	25.0	2.95 / 3.00
400-086-50-3	PA940-B	86	80	50.0	2.95 / 3.00
400-090-12.5-3	PA940-B	90	84	12.5	2.95 / 3.00
400-090-25-3	PA940-B	90	84	25.0	2.95 / 3.00
400-091-39.5-3	PA940-B	91	85	39.5	2.95 / 3.00
400-100-5.9-3	PA940-B	100	94	5.9	2.95 / 3.00
400-100-12.3-3	PA940-B	100	94	12.3	2.95 / 3.00
400-100-22.4-3	PA940-B	100	94	22.4	2.95 / 3.00
400-100-25-3	PA940-B	100	94	25.0	2.95 / 3.00
400-105-15-3	PA940-B	105	99	15.0	2.95 / 3.00
400-105-24.5-3	PA940-B	105	99	24.5	2.95 / 3.00

ENGINEERED SEALS & COMPONENTS, LLC.

SERIES 400 METRIC WEAR RINGS 3,0MM CROSS SECTION

PART NUMBER -BC for butt cut -SC for scarf cut	COMPOUND	BORE O.D.	I.D.	WIDTH	C/S
400-15-40-3	PA940-B	105	99	40.0	2.95 / 3.00
400-110-5.9-3	PA940-B	110	104	5.9	2.95 / 3.00
400-110-12.5-3	PA940-B	110	104	12.5	2.95 / 3.00
400-110-22.4-3	PA940-B	110	104	22.4	2.95 / 3.00
400-110-25-3	PA940-B	110	104	25.0	2.95 / 3.00
400-110-30-3	PA940-B	110	104	30.0	2.95 / 3.00
400-110-35-3	PA940-B	110	104	35.0	2.95 / 3.00
400-115-15-3	PA940-B	115	109	15.0	2.95 / 3.00
400-120-05.9-3	PA940-B	120	114	5.9	2.95 / 3.00
400-120-11-3	PA940-B	120	114	11.0	2.95 / 3.00

PART NUMBER -BC for butt cut -SC for scarf cut	COMPOUND	BORE O.D.	I.D.	WIDTH	C/S
400-120-15-3	PA940-B	120	114	15.0	2.95 / 3.00
400-120-15.45-3	PA940-B	120	114	15.5	2.95 / 3.00
400-120-22.4-3	PA940-B	120	114	22.4	2.95 / 3.00
400-120-30-3	PA940-B	120	114	30.0	2.95 / 3.00
400-120-35-3	PA940-B	120	114	35.0	2.95 / 3.00
400-120-40-3	PA940-B	120	114	40.0	2.95 / 3.00
400-125-12.5-3	PA940-B	125	119	12.5	2.95 / 3.00
400-125-15-3	PA940-B	125	119	15.0	2.95 / 3.00
400-130-12-3	PA940-B	130	124	12.0	2.95 / 3.00
400-140-12.7-3	PA940-B	140	134	12.7	2.95 / 3.00
400-180-20-3	PA940-B	180	174	20.0	2.95 / 3.00
400-200-18.9-3	PA940-B	200	194	18.9	2.95 / 3.00

SERIES 400 METRIC WEAR RINGS 3,1MM CROSS SECTION

PART NUMBER -BC for butt cut -SC for scarf cut	COMPOUND	BORE O.D.	I.D.	WIDTH	C/S
400-036-12.8-3.1	PA940-B	36	29.8	12.7	3.05 / 3.10
400-063-05-3.1	PA940-B	63	56.8	5.0	3.05 / 3.10
400-110-15-3.1	PA940-B	110	103.8	15.0	3.05 / 3.10

PART NUMBER -BC for butt cut -SC for scarf cut	COMPOUND	BORE O.D.	I.D.	WIDTH	C/S
400-115-08-3.1	PA940-B	115	108.8	8.0	3.05 / 3.10
400-125-10-3.1	PA940-B	125	118.8	10.0	3.05 / 3.10

SERIES 400 METRIC WEAR RINGS 3,12MM CROSS SECTION

PART NUMBER -BC for butt cut -SC for scarf cut	COMPOUND	BORE O.D.	I.D.	WIDTH	C/S
400-056-05-3.12	PA940-B	56	49.76	5.0	3.07 / 3.12
400-070-10-3.12	PA940-B	70	63.76	10.0	3.07 / 3.12
400-080-06-3.12	PA940-B	80	73.76	6.0	3.07 / 3.12
400-080-10-3.12	PA940-B	80	73.76	10.0	3.07 / 3.12
400-110-7.9-3.12	PA940-B	110	103.76	7.9	3.07 / 3.12
400-120-20-3.12	PA940-B	120	113.76	20.0	3.07 / 3.12

PART NUMBER -BC for butt cut -SC for scarf cut	COMPOUND	BORE O.D.	I.D.	WIDTH	C/S
400-125-20-3.12	PA940-B	125	118.76	20.0	3.07 / 3.12
400-140-10-3.12	PA940-B	140	133.76	10.0	3.07 / 3.12
400-140-20-3.12	PA940-B	140	133.76	20.0	3.07 / 3.12
400-160-20-3.12	PA940-B	160	153.76	20.0	3.07 / 3.12
400-200-20-3.12	PA940-B	200	193.76	20.0	3.07 / 3.12

3503 W. Milwaukee • Spencer, IA 51301 • p: 712-580-3990 • sales@engseals.com • www.engseals.com

ENGINEERED SEALS & COMPONENTS, LLC.

SERIES 400 METRIC WEAR RINGS 3,15MM CROSS SECTION

PART NUMBER -BC for butt cut -SC for scarf cut	COMPOUND	BORE O.D.	I.D.	WIDTH	C/S
400-075-9.5-3.15	PA940-B	75	68.7	9.5	3.10 / 3.15
400-075-25-3.15	PA940-B	75	68.7	25.0	3.10 / 3.15
400-080-15-3.15	PA940-B	90	83.7	15.0	3.10 / 3.15

PART NUMBER -BC for butt cut -SC for scarf cut	COMPOUND	BORE O.D.	I.D.	WIDTH	C/S
400-100-15-3.15	PA940-B	100	93.7	15.0	3.10 / 3.15
400-075-9.5-3.15	PA940-B	75	68.7	9.5	3.10 / 3.15

SERIES 400 METRIC WEAR RINGS 3,17MM CROSS SECTION

PART NUMBER -BC for butt cut -SC for scarf cut	COMPOUND	BORE O.D.	I.D.	WIDTH	C/S
400-060-12.7-3.17	PA940-B	60	53.66	12.7	3.12 / 3.17
400-060-19-3.17	PA940-B	60	53.66	19.0	3.12 / 3.17
400-080-9.35-3.17	PA940-B	80	73.66	9.4	3.12 / 3.17

PART NUMBER -BC for butt cut -SC for scarf cut	COMPOUND	BORE O.D.	I.D.	WIDTH	C/S
400-085-25-3.17	PA940-B	85	78.66	25.0	3.12 / 3.17
400-090-9.35-3.17	PA940-B	90	83.66	9.4	3.12 / 3.17
400-130-9.4-3.17	PA940-B	130	123.66	9.4	3.12 / 3.17
400-135-9.4-3.17	PA940-B	135	128.66	9.4	3.12 / 3.17

SERIES 400 METRIC WEAR RINGS 3,2MM CROSS SECTION

PART NUMBER -BC for butt cut -SC for scarf cut	COMPOUND	BORE O.D.	I.D.	WIDTH	C/S
400-050-15-3.2	PA940-B	50	43.6	15.0	3.15 / 3.20
400-075-29.8-3.2	PA940-B	75	68.6	29.8	3.15 / 3.20
400-080-29.38-3.2	PA940-B	80	73.6	29.8	3.15 / 3.20

PART NUMBER -BC for butt cut -SC for scarf cut	COMPOUND	BORE O.D.	I.D.	WIDTH	C/S
400-080-19-3.2	PA940-B	80	74	19.0	3.15 / 3.20
400-095-25.4-3.2	PA940-B	95	88.6	25.4	3.15 / 3.20

SERIES 400 METRIC WEAR RINGS 3,25MM CROSS SECTION

PART NUMBER -BC for butt cut -SC for scarf cut	COMPOUND	BORE O.D.	I.D.	WIDTH	C/S
400-100-28.3-3.24	PA940-B	100	93.52	28.3	3.18 / 3.24
400-085-29.9-3.25	PA940-B	85	78.5	29.9	3.20 / 3.25
400-125-27.8-3.25	PA940-B	125	118.5	27.8	3.20 / 3.25

PART NUMBER -BC for butt cut -SC for scarf cut	COMPOUND	BORE O.D.	I.D.	WIDTH	C/S
400-200-60-3.25	PA940-B	200	193.5	60.0	3.20 / 3.25
400-220-38-3.25	PA940-B	220	213.5	38.0	3.20 / 3.25
400-220-60-3.25	PA940-B	220	213.5	60.0	3.20 / 3.25

ENGINEERED SEALS & COMPONENTS, LLC.

SERIES 400 METRIC WEAR RINGS 3,5MM CROSS SECTION

PART NUMBER -BC for butt cut -SC for scarf cut	COMPOUND	BORE O.D.	I.D.	WIDTH	C/S
400-130-7.9-3.5	PA940-B	130	123	7.9	3.45 / 3.50
400-130-15-3.5	PA940-B	130	123	15.0	3.45 / 3.50
400-130-18.1-3.5	PA940-B	130	123	18.1	3.45 / 3.50
400-130-30-3.5	PA940-B	130	123	30.0	3.45 / 3.50
400-130-40-3.5	PA940-B	130	123	40.0	3.45 / 3.50
400-135-14.8-3.5	PA940-B	135	128	14.8	3.45 / 3.50
400-135-18.3+3.5	PA940-B	135	128	18.3	3.45 / 3.50
400-140-17.5-3.5	PA940-B	140	133	17.5	3.45 / 3.50
400-140-20.35-3.5	PA940-B	140	133	20.4	3.45 / 3.50
400-140-35-3.5	PA940-B	140	133	35.0	3.45 / 3.50

PART NUMBER -BC for butt cut -SC for scarf cut	COMPOUND	BORE O.D.	I.D.	WIDTH	C/S
400-140-45-3.5	PA940-B	140	133	45.0	3.45 / 3.50
400-145-14.8-3.5	PA940-B	145	138	14.8	3.45 / 3.50
400-150-14.8-3.5	PA940-B	150	143	14.8	3.45 / 3.50
400-150-20.9-3.5	PA940-B	150	143	20.9	3.45 / 3.50
400-150-35-3.5	PA940-B	150	143	35.0	3.45 / 3.50
400-150-45-3.5	PA940-B	150	143	45.0	3.45 / 3.50
400-160-20-3.5	PA940-B	160	153	20.0	3.45 / 3.50
400-160-2.3-3.5	PA940-B	160	153	20.3	3.45 / 3.50
400-160-40-3.5	PA940-B	160	153	40.0	3.45 / 3.50
400-160-45-3.5	PA940-B	160	153	45.0	3.45 / 3.50

SERIES 400 METRIC WEAR RINGS 3, THRU 3,8MM CROSS SECTION

PART NUMBER -BC for butt cut -SC for scarf cut	COMPOUND	BORE O.D.	I.D.	WIDTH	C/S
400-099-13.9-3.6	PA940-B	99	91.8	13.9	3.55 / 3.60
400-170-25-3.8	PA940-B	170	162.4	25	3.75 / 3.80
400-135-9.85-3.85	PA940-B	135	127.3	9.85	3.80 / 3.85
400-145-9.7-3.85	PA940-B	145	137.3	9.7	3.80 / 3.85

SERIES 400 METRIC WEAR RINGS 4,0MM CROSS SECTION

PART NUMBER -BC for butt cut -SC for scarf cut	COMPOUND	BORE O.D.	I.D.	WIDTH	C/S
400-095-5.9-4	PA940-B	95	87	5.9	3.95 / 4.00
400-095-15-4	PA940-B	95	87	15.0	3.95 / 4.00
400-105-6.1-4	PA940-B	105	97	6.1	3.95 / 4.00
400-115-14.8-4	PA940-B	115	107	14.8	3.95 / 4.00
400-120-8-4	PA940-B	120	112	8.0	3.95 / 4.00
400-124-10-4	PA940-B	124	116	10.0	3.95 / 4.00
400-125-8.1-4	PA940-B	125	117	8.1	3.95 / 4.00
400-135-7.75-4	PA940-B	135	127	7.8	3.95 / 4.00
400-135-16-4	PA940-B	135	127	16.0	3.95 / 4.00
400-140-7.9-4	PA940-B	140	132	7.9	3.95 / 4.00

PART NUMBER -BC for butt cut -SC for scarf cut	COMPOUND	BORE O.D.	I.D.	WIDTH	C/S
400-150-20-4	PA940-B	150	142	20.0	3.95 / 4.00
400-165-15-4	PA940-B	165	157	15.0	3.95 / 4.00
400-168.5-9.5-4	PA940-B	169	157	9.5	3.95 / 4.00
400-170-9.35-4	PA940-B	170	162	9.4	3.95 / 4.00
400-170-9.5-4	PA940-B	170	162	9.5	3.95 / 4.00
400-170-25-4	PA940-B	170	162	25.0	3.95 / 4.00
400-170-50-4	PA940-B	170	162	50.0	3.95 / 4.00
400-180-8.9-4	PA940-B	180	172	8.9	3.95 / 4.00
400-180-22.5-4	PA940-B	180	172	22.5	3.95 / 4.00
400-180-28-4	PA940-B	180	172	28.0	3.95 / 4.00

3503 W. Milwaukee • Spencer, IA 51301 • p: 712-580-3990 • sales@engseals.com • www.engseals.com

ENGINEERED SEALS & COMPONENTS. LLC.

SERIES 400 METRIC WEAR RINGS 4,0MM CROSS SECTION

PART NUMBER -BC for butt cut -SC for scarf cut	COMPOUND	BORE O.D.	I.D.	WIDTH	C/S
400-095-5.9-4	PA940-B	95	87	5.9	3.95 / 4.00
400-095-15-4	PA940-B	95	87	15.0	3.95 / 4.00
400-105-6.1-4	PA940-B	105	97	6.1	3.95 / 4.00
400-115-14.8-4	PA940-B	115	107	14.8	3.95 / 4.00
400-120-8-4	PA940-B	120	112	8.0	3.95 / 4.00
400-124-10-4	PA940-B	124	116	10.0	3.95 / 4.00
400-125-8.1-4	PA940-B	125	117	8.1	3.95 / 4.00
400-135-7.75-4	PA940-B	135	127	7.8	3.95 / 4.00
400-135-16-4	PA940-B	135	127	16.0	3.95 / 4.00
400-140-7.9-4	PA940-B	140	132	7.9	3.95 / 4.00
400-150-20-4	PA940-B	150	142	20.0	3.95 / 4.00
400-165-15-4	PA940-B	165	157	15.0	3.95 / 4.00
400-168.5-9.5-4	PA940-B	169	157	9.5	3.95 / 4.00
400-170-9.35-4	PA940-B	170	162	9.4	3.95 / 4.00
400-170-9.5-4	PA940-B	170	162	9.5	3.95 / 4.00

PART NUMBER -BC for butt cut -SC for scarf cut	COMPOUND	BORE O.D.	I.D.	WIDTH	C/S
400-170-25-4	PA940-B	170	162	25.0	3.95 / 4.00
400-170-50-4	PA940-B	170	162	50.0	3.95 / 4.00
400-180-8.9-4	PA940-B	180	172	8.9	3.95 / 4.00
400-180-22.5-4	PA940-B	180	172	22.5	3.95 / 4.00
400-180-28-4	PA940-B	180	172	28.0	3.95 / 4.00
400-180-45-4	PA940-B	180	172	45.0	3.95 / 4.00
400-180-55-4	PA940-B	180	172	55.0	3.95 / 4.00
400-185-45-4	PA940-B	185	173	45.0	3.95 / 4.00
400-190-9.2-4	PA940-B	190	182	9.2	3.95 / 4.00
400-190-9.5-4	PA940-B	190	182	9.5	3.95 / 4.00
400-190-28.4-4	PA940-B	190	182	28.4	3.95 / 4.00
400-190-45-4	PA940-B	190	182	45.0	3.95 / 4.00
400-190-55-4	PA940-B	190	182	55.0	3.95 / 4.00
400-200-22-4	PA940-B	200	192	22.0	3.95 / 4.00
400-200-22.5-4	PA940-B	200	192	22.5	3.95 / 4.00
400-200-45-4	PA940-B	200	192	45.0	3.95 / 4.00
400-210-28.3-4	PA940-B	210	202	28.3	3.95 / 4.00
400-225-25-4	PA940-B	225	217	25.0	3.95 / 4.00
400-225-50-4	PA940-B	225	217	50.0	3.95 / 4.00
400-250-55-4	PA940-B	250	242	55.0	3.95 / 4.00
400-280-60-4	PA940-B	280	272	60.0	3.95 / 4.00

SERIES 400 METRIC WEAR RINGS 4,5MM CROSS SECTION

PART NUMBER -BC for butt cut -SC for scarf cut	COMPOUND	BORE O.D.	I.D.	WIDTH	C/S
400-090-10-4.5	PA940-B	90	81	10.0	4.45 / 4.50
400-090-12.5-4.5	PA940-B	90	81	12.5	4.45 / 4.50
400-095-9.85-4.5	PA940-B	95	86	9.9	4.45 / 4.50
400-095-12.5-4.5	PA940-B	95	86	12.5	4.45 / 4.50
400-100-10-4.5	PA940-B	100	91	10.0	4.45 / 4.50

PART NUMBER -BC for butt cut -SC for scarf cut	COMPOUND	BORE O.D.	I.D.	WIDTH	C/S
400-105-10-4.5	PA940-B	105	96	10.0	4.45 / 4.50
400-105-12.5-4.5	PA940-B	105	96	12.5	4.45 / 4.50
400-110-10-4.5	PA940-B	110	101	10.0	4.45 / 4.50
400-110-12.5-4.5	PA940-B	110	101	12.5	4.45 / 4.50
400-115-10-4.5	PA940-B	115	106	10.0	4.45 / 4.50
400-115.15-4.5	PA940-B	115	106	15.0	4.45 / 4.50
400-120-10-4.5	PA940-B	120	111	10.0	4.45 / 4.50
400-120-15-4.5	PA940-B	120	111	15.0	4.45 / 4.50

ENGINEERED SEALS & COMPONENTS, LLC.

SERIES 400 METRIC WEAR RINGS 5,0MM CROSS SECTION

PART NUMBER -BC for butt cut -SC for scarf cut	COMPOUND	BORE O.D.	I.D.	WIDTH	C/S
400-125-10-5	PA940-B	125	115	10.0	4.95 / 5.00
400-125-15-5	PA940-B	125	115	15.0	4.95 / 5.00
400-130-10-5	PA940-B	130	120	10.0	4.95 / 5.00

PART NUMBER -BC for butt cut -SC for scarf cut	COMPOUND	BORE O.D.	I.D.	WIDTH	C/S
400-130-15-5	PA940-B	130	120	15.0	4.95 / 5.00
400-135-10-5	PA940-B	135	125	10.0	4.95 / 5.00
400-135-15-5	PA940-B	135	125	15.0	4.95 / 5.00

SERIES 400 METRIC WEAR RINGS 6,0MM CROSS SECTION

PART NUMBER -BC for butt cut -SC for scarf cut	COMPOUND	BORE O.D.	I.D.	WIDTH	C/S
400-140-12.5-6	PA940-B	140	128	12.5	5.95 / 6.00
400-140-17.5-6	PA940-B	140	128	17.5	5.95 / 6.00
400-145-12.2-6	PA940-B	145	133	12.2	5.95 / 6.00
400-150-12.2-6	PA940-B	150	138	12.2	5.95 / 6.00
400-150-17.5-6	PA940-B	150	138	17.5	5.95 / 6.00

PART NUMBER -BC for butt cut -SC for scarf cut	COMPOUND	BORE O.D.	I.D.	WIDTH	C/S
400-160-15-6	PA940-B	160	148	15.0	5.95 / 6.00
400-160-20-6	PA940-B	160	148	20.0	5.95 / 6.00
400-170-20-6	PA940-B	170	158	20.0	5.95 / 6.00
400-180-22.7-6	PA940-B	180	168	22.7	5.95 / 6.00
400-185-22.5-6	PA940-B	185	173	22.5	5.95 / 6.00
400-200-22.5-6	PA940-B	200	188	22.5	5.95 / 6.00
400-225-25-6	PA940-B	225	213	25.0	5.95 / 6.00
400-250-27.5-6	PA940-B	250	238	27.5	5.95 / 6.00
400-260-27.5-6	PA940-B	260	248	27.5	5.95 / 6.00
400-300-30-6	PA940-B	300	288	30.0	5.95 / 6.00

3503 W. Milwaukee • Spencer, IA 51301 • p: 712-580-3990 • sales@engseals.com • www.engseals.com

WARRANTY AND REMEDY

Important Notice:

We reserve the right to make changes without notice in our products and in the information content of this brochure / catalog. The statements and information in the brochure / catalog are intended to serve as a guide only. They are not warranties or binding descriptions of the products.

Requests for more information are welcome. In particular, we will be glad to provide samples for your to inspect and test in your assemblies and plant before you make a final decision for you application.

Notice of Exclusive Warranty and Remedy

Briefly, our exclusive warranty is against defects in materials and workmanship at the time of shipment. It is in lieu of all other warranties. There is no implied warranty of merchantability or fitness for a particular purpose. The exclusive remedy is replacement of defective products, or at our option, refund of their purchase price. All damages exceeding the purchase price are excluded, weather consequential or otherwise and regardless of cause. The terms and conditions on our printed quotation contain a much more complete statement of our Exclusive Warranty and Remedy

ESC

ENGINEERED SEALS & COMPONENTS, LLC.

ENGINEERED SEALS & COMPONENTS

"Let's Make it Happen"

www.engseals.com • 712-580-3990

WR-400-24